cristalstone

INSTALLATION INSTRUCTIONS FOR WASH BASINS

BEFORE ASSEMBLY:

PREPARE A DRILLING MACHINE, SUITABLE DRILLS, SELECTED FOR THE TYPE OF WALL, SPIRIT LEVEL, SILICONE AND SUITABLE WRENCHES OR UNIVERSAL WRENCHES FOR SCREW NUTS.

1. WALL CLADDINGS MUST BE DRILLED WITH A SUITABLE DRILL WITHOUT IMPACT.

2. THE HOLES MUST BE DRILLED STRAIGHT TO MAINTAIN THE POSITION OF THE WASHBASIN.

3. THE FIXING SCREWS AND DOWELS MUST BE MATCHED TO THE RESPECTIVE SUBSTRATE.

USE WIDE PLASTIC OR LACQUER WASHERS UNDER THE BOLT HEADS.

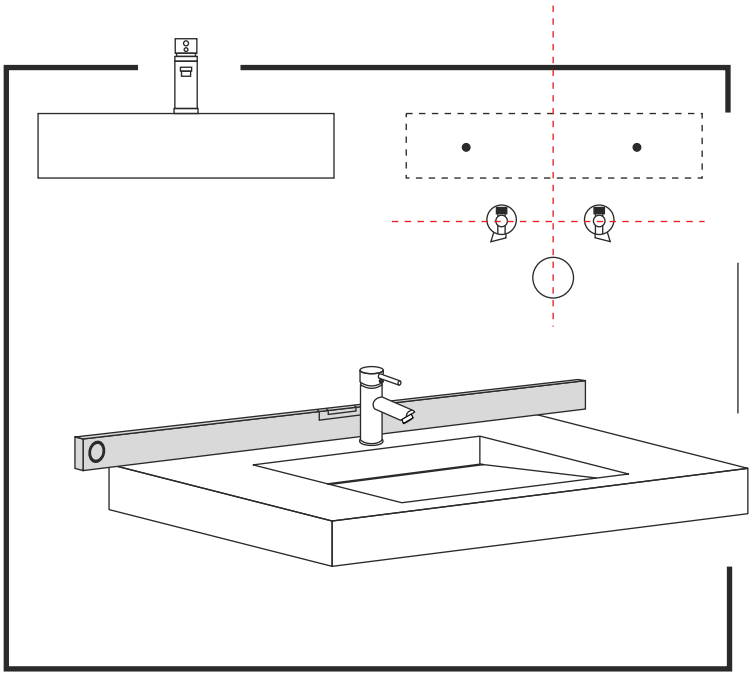

ASSEMBLY INSTRUCTIONS:

1. INSTALL THE WASH BASIN AT THE INSTALLATION SITE.

2. LEVEL THE WASH BASIN WITH THE SPIRIT LEVEL.

3. USE A PENCIL OR MARKER TO MARK THE DRILLING SITE.

4. AFTER DRILLING THE FIXING HOLES, MOUNT THE DOWELS.

IF THE WALLS ARE WEAKER, CONSIDER USING CHEMICAL ANCHORS.

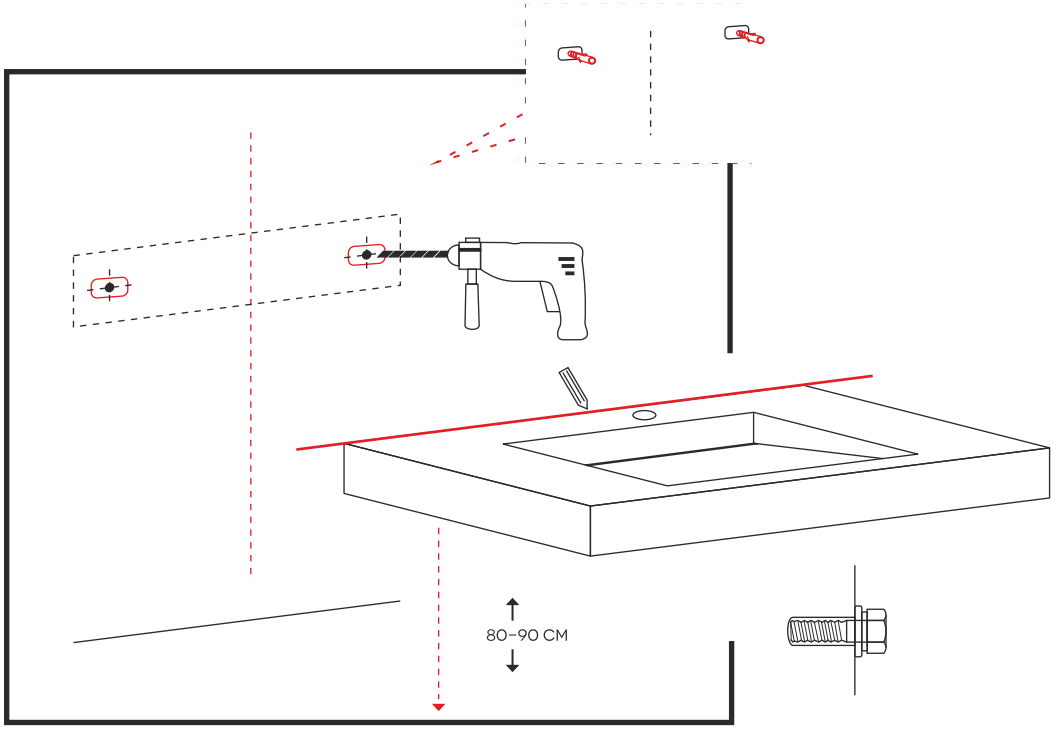

5. PUT THE SINK ON THE SCREWS, FIX IT WITH WASHERS AND PUT IT ON THE WALL.

6. MOUNT THE TAP AND SPOUT ON THE WASH BASIN. IF NECESSARY, USE THE REDUCTION INCLUDED IN THE SCOPE OF DELIVERY. TIGHTEN THE ENTIRE ATTACHMENT SENSITIVELY AND CLOSE THE EDGE WITH SILICONE.

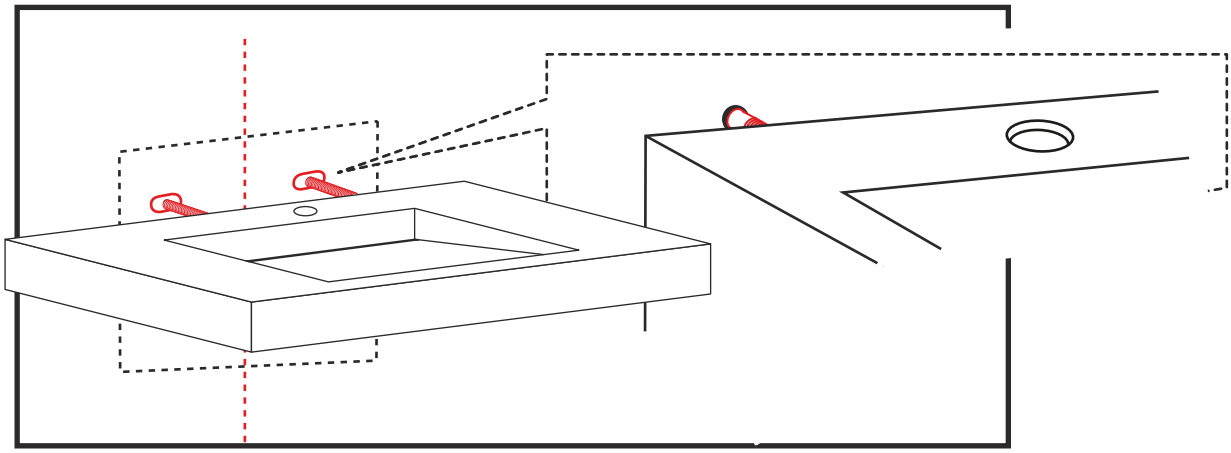

ARE INCLUDED IN THE SCOPE OF DELIVERY:

1. WASH BASIN

2. REDUCTION WITH ONE CUP

3. INSTRUCTIONS WITH THE WARRANTY CARD

BE CAREFUL DURING ASSEMBLY. USE SAFE TOOLS, GOGGLES AND GLOVES.